LONG SEAMS	
COURSE	ORIENTATION
1(TOP)	90°
2	100°

*VERT – TOP TO BOTTOM

Ship loose items:
None

NOTE 6: INTERIOR TO BE #4 POLISH.
PICKLE ALL EXTERIOR WELDS.
CLEAN & PASSIVATE INTERIOR & EXTERIOR OF VESSEL.

NOTE 7: INTERIOR WELDS TO BE GROUND SMOOTH NOT FLUSH.

*NOTE: ALL ELEVATIONS ARE PULLED FROM WELD SEAM FOR EASE OF FABRICATION

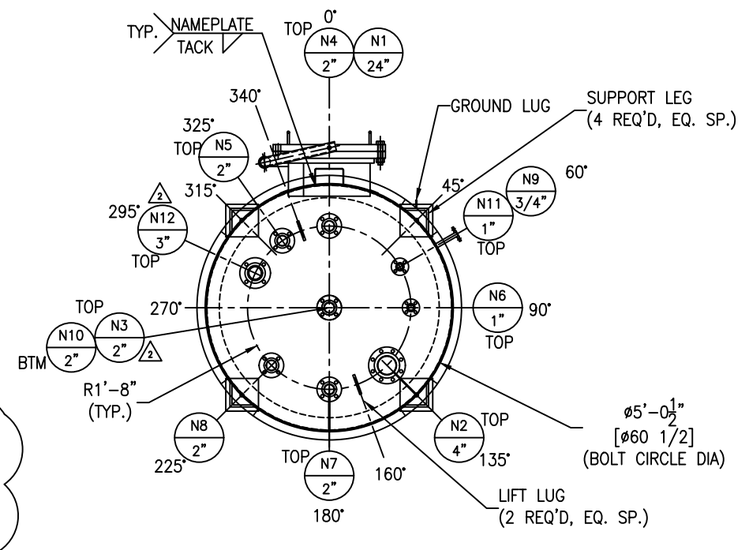

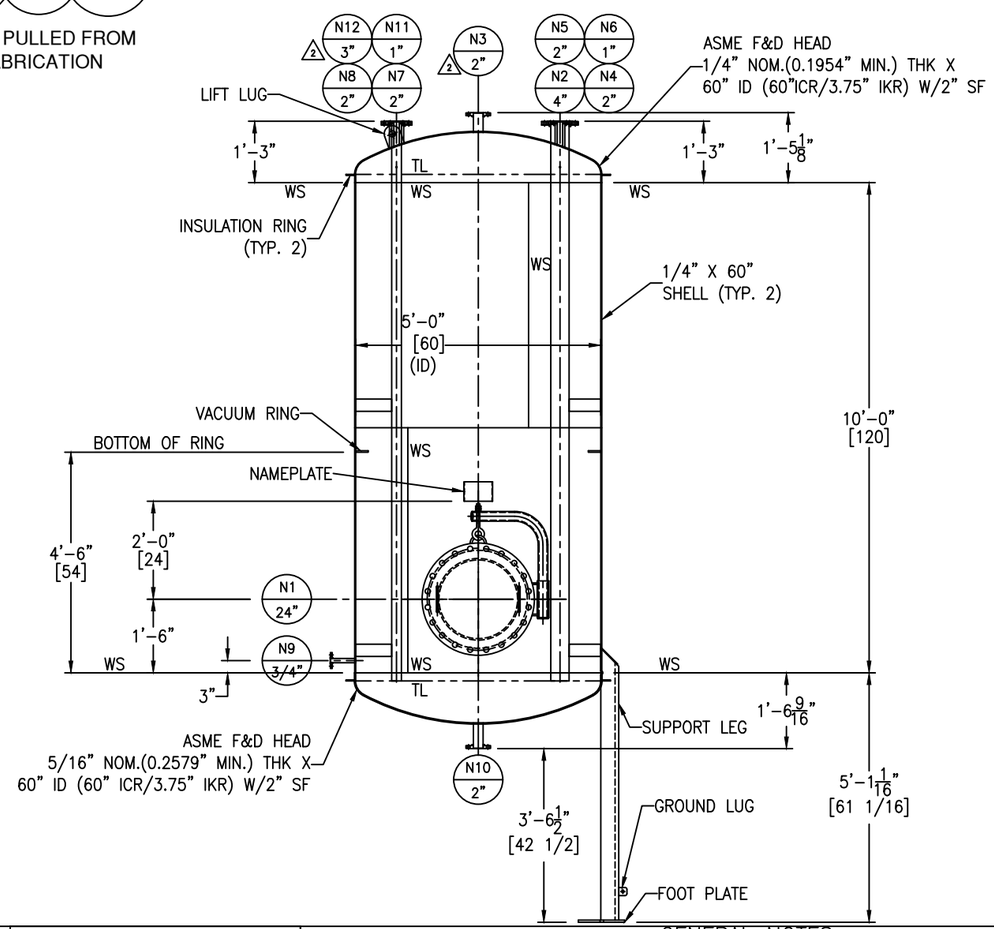

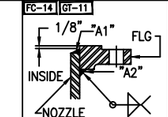

FIGURE NO. 1

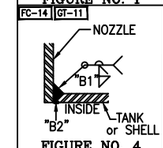

FIGURE NO. 4

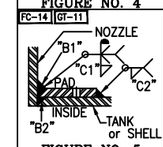

FIGURE NO. 5

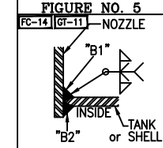

FIGURE NO. 7

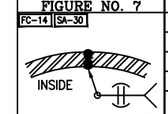

SHELL THK. < 5/16"

FIGURE NO. 9

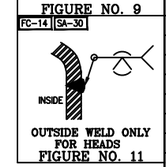

OUTSIDE WELD ONLY FOR HEADS

FIGURE NO. 11

NOZZLE SCHEDULE

MARK	SERVICE	SIZE	RATING	TYPE / STYLE	NECK SCHED.	PROJECTION EXT. (℄)	PROJECTION INT. (MIN.)	WELD FIGURE	REPAD SIZE (WIDTH X THK.)	WELD SIZE "A1"	WELD SIZE "A2"	WELD SIZE "B1"	WELD SIZE "B2"	WELD SIZE "C1"	WELD SIZE "C2"
N1	MANWAY	24	150#	RFSO W/DAVIT	3/8"	8"	–	1,5	2" X 1/4"	1/4	9/16	1/4	1/8	1/4	1/4
N2	LIQUID INLET	4"	150#	RFSO	80S	SEE DWG	SEE DWG	1,7	–	3/16	3/16	1/4	1/8	–	–
N3	VENT	2"	150#	RFSO	40S	SEE DWG	–	1,4	–	3/16	1/4	3/16	1/8	–	–
N4	LEVEL TRANSMITTER	2"	150#	RFSO	40S	SEE DWG	–	1,4	–	3/16	1/4	3/16	1/8	–	–
N5	LEVEL SWITCH	2"	150#	RFSO	40S	SEE DWG	–	1,4	–	3/16	1/4	3/16	1/8	–	–
N6	NITROGEN	1"	150#	RFSO	40S	SEE DWG	–	1,4	–	3/16	3/16	3/16	1/8	–	–
N7	LIQUID INLET	2"	150#	RFSO	40S	SEE DWG	SEE DWG	1,7	–	3/16	3/16	3/16	1/8	–	–
N8	PRESSURE	2"	150#	RFSO	40S	SEE DWG	–	1,4	–	3/16	1/4	3/16	1/8	–	–
N9	SAMPLE	3/4"	150#	RFSO	40S	6"	–	1,4	–	1/8	3/16	3/16	1/8	–	–
N10	BOTTOM OUTLET	2"	150#	RFSO	40S	SEE DWG	–	1,4	–	3/16	3/16	3/16	1/8	–	–
N11	PRESSURE SENSING	1"	150#	RFSO	40S	SEE DWG	–	1,4	–	3/16	3/16	3/16	1/8	–	–
N12	RELIEF	3"	150#	RFSO	40S	SEE DWG	–	1,4	–	1/4	5/16	1/4	1/8	–	–

MATERIALS OF CONSTRUCTION

	VESSEL
SHELL	SA240-316/316L (#4 POLISH INSIDE)
HEADS	SA240-316/316L (#4 POLISH INSIDE)
VACUUM RINGS	SA240-316/316L (#4 POLISH)
NOZZLE NECKS	SA312-316/316L WLD (#4 POLISH INSIDE)
NOZZLE FLANGES	SA182F-316/316L
MANWAY NECKS	SA240-316/316L (#4 POLISH INSIDE)
MANWAY FLANGES	SA182F-316/316L
GASKETS	PTFE
BOLTS/STUDS	SA193-B7 (ZINC PLATED)
NUTS	SA194-2H (ZINC PLATED)
REPADS	SA240-304/304L
COUPLINGS	–
STUDPAD	SA182F-316/316L
SUPPORTS/HOLD DOWNS	SA479-304/304L & SA240-304/304L
LIFTING LUGS	SA240-304/304L
PLATFORM	–
INSULATION RINGS	SA240-304/304L
GROUND LUG	SA240-304/304L
BAFFLE	–
LADDER	–
TANK CLIPS (LADDER)	–
HANDRAIL	–
HANDRAIL CLIPS	–
PLATFORM	–
PLATFORM CLIPS	–
DIPTUBE SUPPORT	–
JACKET SHELL	–
JACKET HEADS	–
JACKET NOZZLE NECKS	–

DESIGN DATA

	VESSEL
DESIGN AND FAB. CODE	ASME
CERT. STAMP REQ'D.	YES
DESIGN PRESSURE	14.9 PSIG/FV
DESIGN TEMPERATURE	250° F
MIN. DESIGN METAL TEMP.	–20° F @ 14.9 PSIG
OPERATING PRESSURE	1 PSIG
OPERATING TEMPERATURE	125° F
JOINT EFFICIENCY HEADS	0.70
JOINT EFFICIENCY SHELL	0.70
CORROSION ALLOWANCE	0"
SPECIFIC GRAVITY	0.86
EARTHQUAKE ZONE	Ss = (0.550) S1 = (0.160)
WIND LOAD	INDOOR
STRESS RELIEF	NOT REQ'D
RADIOGRAPHIC EXAM	NOT REQ'D
DYE PENETRANT EXAM	NOT REQ'D
MAGNETIC PARTICLE EXAM	NOT REQ'D
HYDROSTATIC TEST	20 PSIG / GAUGE #11
PNEUMATIC TEST	–
JKT DESIGN AND FAB. CODE	–
JKT CERT. STAMP REQ'D.	–
JKT DESIGN PRESSURE	–
JKT DESIGN TEMPERATURE	–
JKT MIN. DESIGN METAL TEMP.	–
JKT OPERATING PRESSURE	–
JKT OPERATING TEMPERATURE	–
JKT JOINT EFFICIENCY HEADS	–
JKT JOINT EFFICIENCY SHELL	–
JKT HYDRO TEST	–

VESSEL FINISH

INTERIOR WELD TREATMENT:	SEE NOTE 7
EXTERIOR WELD TREATMENT:	SAV TANK STANDARD
SAV TANK FINISHING STANDARD:	SEE NOTE 6
INSULATION:	2" BY OTHERS
PAINTING:	N/A

VESSEL CAPACITY AND WEIGHTS

OPERATING CAPACITY	900 GAL.
FULL CAPACITY	1,600 GAL.
EMPTY SHIPPING WEIGHT	4,050 LBS.
WEIGHT FULL OF WATER	18,000 LBS.
WEIGHT FULL OF PRODUCT	16,050 LBS.

ASME SECT. VIII, DIV. 1
2023 EDITION

ENG. _____ DATE: _____
Q.C. _____ DATE: _____
A.I. _____ DATE: _____

This drawing is issued for customer approval. please review, make approval changes (if any) in red. check the appropriate box, sign & date.

- ☐ Approval – no changes. Please proceed with fabrication.
- ☐ Approved as noted. Please proceed with fabrication
- ☐ Not approved. Please make changes and resubmit.

Customer signature _____ Date _____

GENERAL NOTES

1.) COVER ALL FLANGES, OPENINGS & MACHINED SURFACES PRIOR TO SHIPMENT UNLESS OTHERWISE NOTED.
2.) BOLT HOLES TO STRADDLE 0° & 180° UNLESS OTHERWISE NOTED.
3.) REPADS TO HAVE (1) ø1/4" NPT TELL-TALE HOLES FOR PNEUMATIC TESTING AT 2 PSIG FOR PRESSURE RETAINING PARTS. ALL OTHER REPADS TO HAVE (1) ø1/4" WEEP HOLE AT LOWEST POINT ON PAD.
4.) ASME CODE VESSELS TO BE IN ACCORDANCE WITH UG-80 & UG-81. TOLERANCES: +/- 1/8" FOR DIMENSIONS AND +/- 2 DEGREES FOR ORIENTATIONS.
5.) ASME MATERIALS TO CONFORM TO THE FOLLOWING: FLANGES – B16.5, FITTINGS – B16.9 & COUPLINGS – B16.11.
6.) INTERIOR TO BE #4 POLISH. PICKLE ALL EXTERIOR WELDS. CLEAN & PASSIVATE INTERIOR & EXTERIOR OF VESSEL.
7.) INTERIOR WELDS TO BE GROUND SMOOTH NOT FLUSH.

REVISIONS

REV	D.BY	C.BY	DATE	DESCRIPTION
				AS BUILT
2	AD	RS	2/5/26	CERTIFIED
1	RS	NP	1/15/26	APPROVAL REV 1
0	AD	RS	11/26/25	APPROVAL

Savannah Tank & Equipment Corp.
1517 Telfair Road, Savannah, GA 31415
(912) 233-8902

DRAWN BY: AD
CHK'D BY: RS
APPROVED BY: NP
SCALE: 1/2" = 1'-0"

EPIC SYSTEMS GROUP, LLC.
TOLUENE RECOVERY SURGE TANK
EQUIP. #T-120
CUST. PO #64350

DRAWING NO.: 113-25-1 SHT 1 OF 3 REV. SET 2

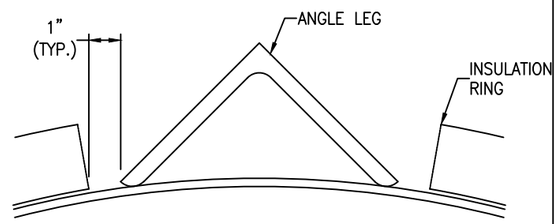

BOTTOM INSULATION RING CUTOUT DETAIL

(4 REQ'D) SCALE: 4" = 1'-0"

FC-14

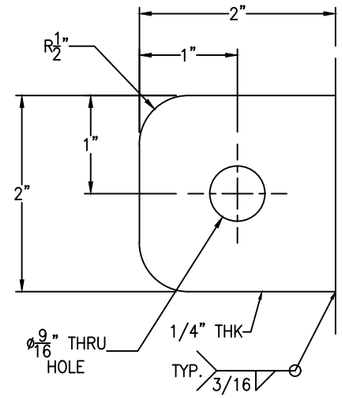

GROUND LUG IS LOCATED @ 45°

GROUND LUG DETAIL

(1 REQ'D) SCALE: 1'-0" = 1'-0"

FC-14

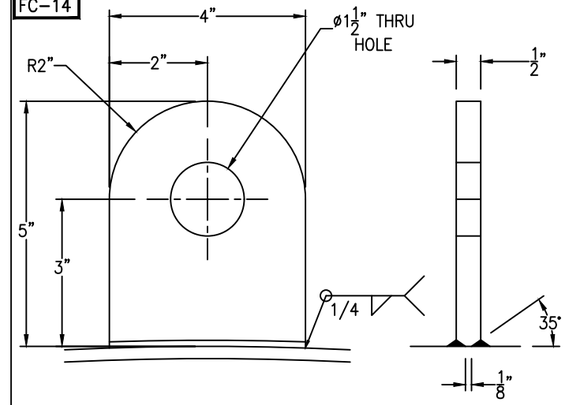

TANK WT. <= 5000#
SHACKLE PIN DIA. = 3/4"

LIFT LUG DETAIL

(2 REQ'D) SCALE: 6" = 1'-0"

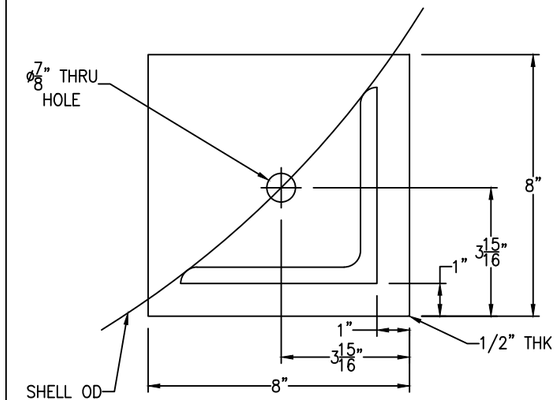

FOOT PLATE DETAIL

(4 REQ'D) SCALE: 4" = 1'-0"

FC-14

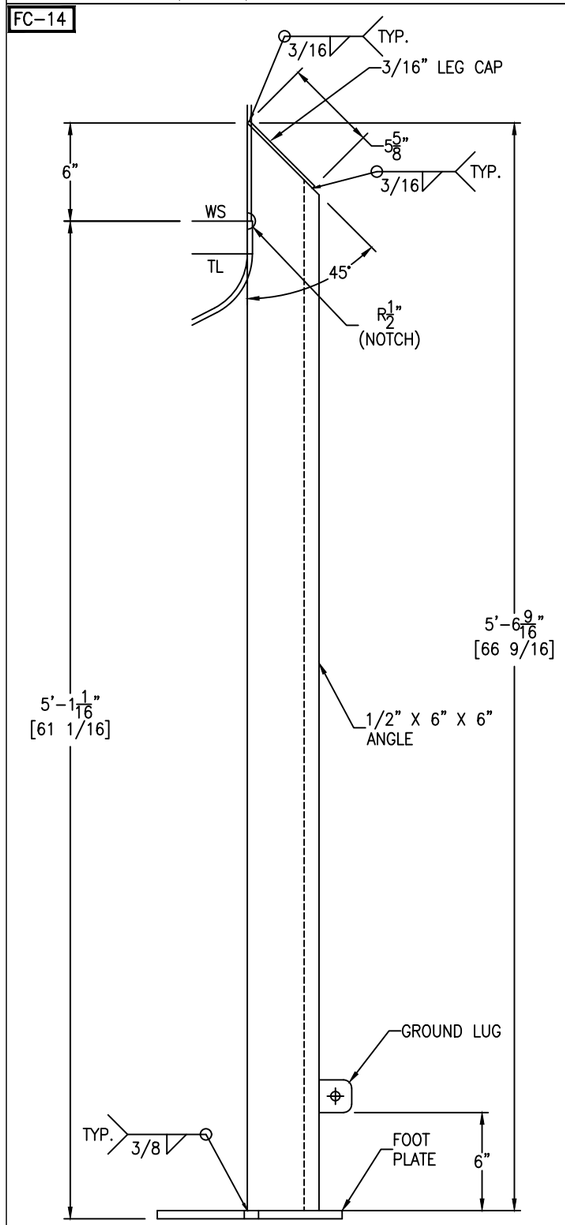

SUPPORT LEG DETAIL

(4 REQ'D) SCALE: 2" = 1'-0"

FC-14

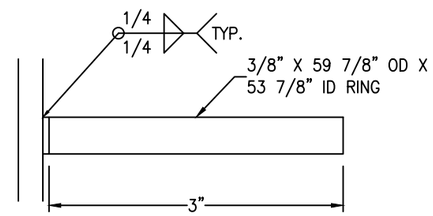

SEE SHT #1 FOR ELEVATION

VACUUM RING DETAIL

(1 REQ'D) SCALE: 1'-0" = 1'-0"

FC-14

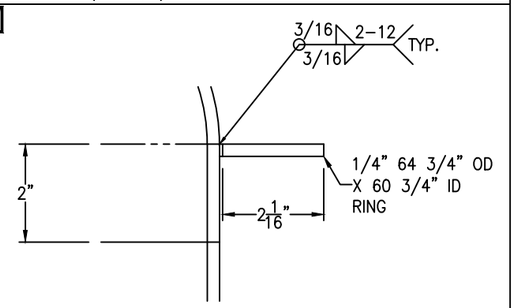

TOP INSULATION RING DETAIL

SCALE: 6" = 1'-0"

FC-14

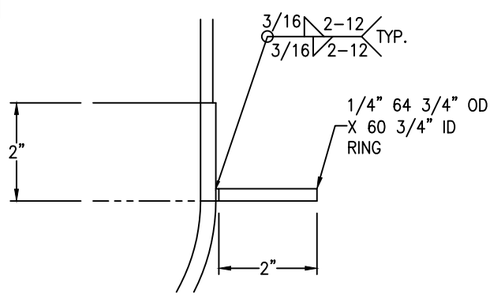

BOTTOM INSULATION RING DETAIL

SCALE: 6" = 1'-0"

FC-14

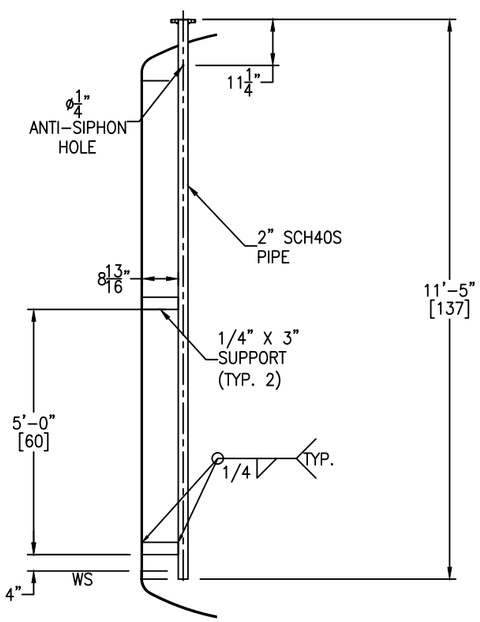

NOZZLE N7 DETAIL

SCALE: 1/2" = 1'-0"

FC-14

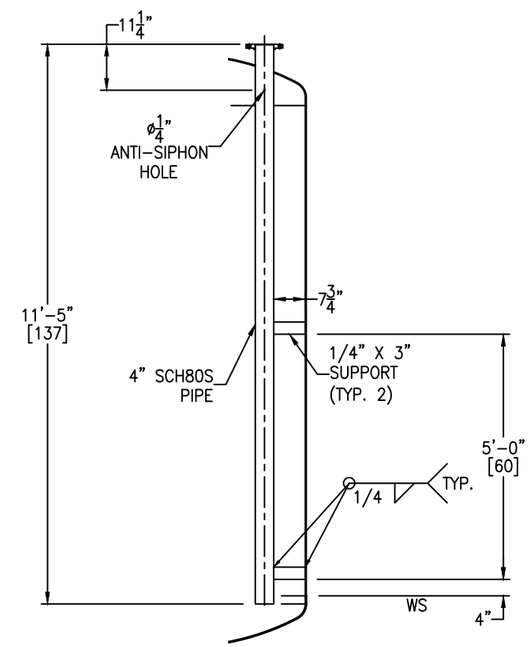

NOZZLE N2 DETAIL

SCALE: 1/2" = 1'-0"

REV	D.BY	C.BY	DATE	DESCRIPTION
				AS BUILT
2	AD	RS	2/5/26	CERTIFIED
1	RS	NP	1/15/26	APPROVAL REV 1
0	AD	RS	11/26/25	APPROVAL

⚠1 REVISIONS

Savannah Tank & Equipment Corp.
1517 Telfair Road, Savannah, GA 31415
(912) 233-8902

DRAWN BY: AD
CHK'D BY: RS
APPROVED BY: NP
SCALE: 1/2" = 1'-0"

EPIC SYSTEMS GROUP, LLC.
TOLUENE RECOVERY SURGE TANK
EQUIP. #T-120
CUST. PO #64350

DRAWING NO.: 113-25-2 SHT 2 OF 3 REV. SET 2

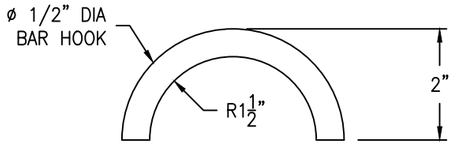

HOOK DETAIL

(1 REQ'D) SCALE: 6" = 1'-0"

FC-14

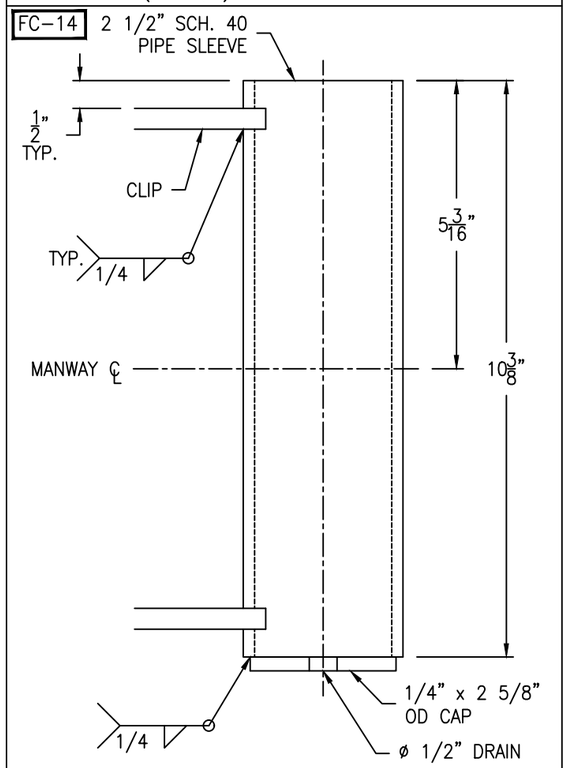

SLEEVE DETAIL

(1 REQ'D) SCALE: 6" = 1'-0"

FC-14

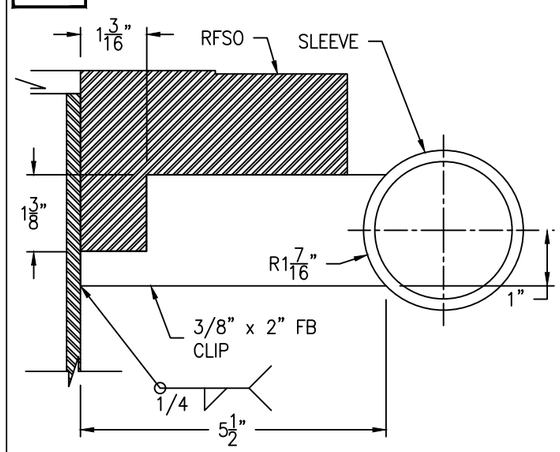

CLIP DETAIL

(2 REQ'D) SCALE: 6" = 1'-0"

FC-14

Bolting for blind
(20) 1 1/4-7 NC x 7" FULL THREADED STUD
(40) 1 1/4-7 NC HH NUT
(1) 24" 150# RING GASKET x 1/8"

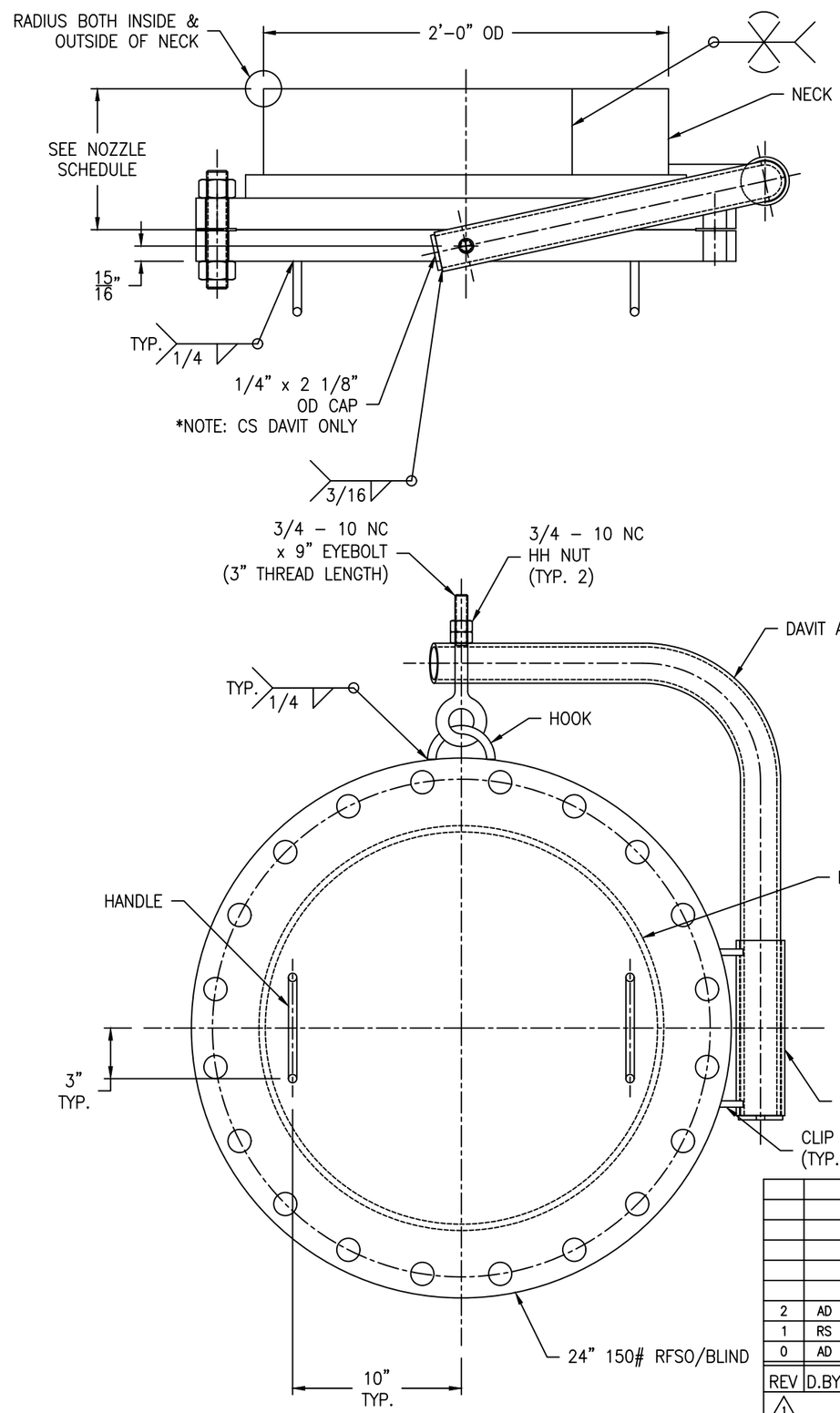

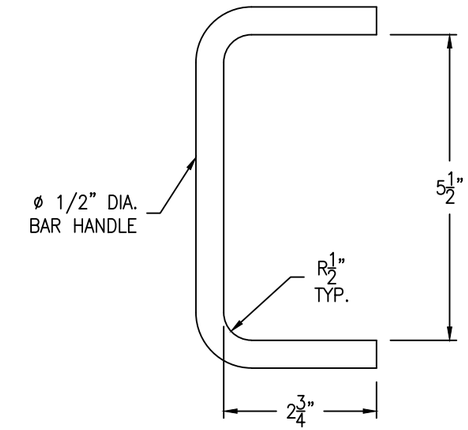

HANDLE DETAIL

(2 REQ'D) SCALE: 6" = 1'-0"

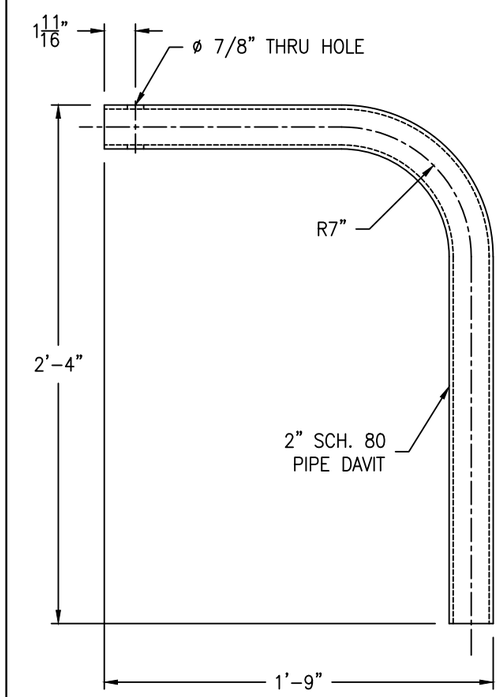

DAVIT ARM DETAIL

(1 REQ'D) SCALE: 2" = 1'-0"

REV	D.BY	C.BY	DATE	DESCRIPTION
				AS BUILT
2	AD	RS	2/5/26	CERTIFIED
1	RS	NP	1/15/26	APPROVAL REV 1
0	AD	RS	11/26/25	APPROVAL

REVISIONS

Savannah Tank & Equipment Corp.
1517 Telfair Road, Savannah, GA 31415
(912) 233-8902

DRAWN BY: AD
CHK'D BY: RS
APPROVED BY: NP
SCALE: 2" = 1'-0"

EPIC SYSTEMS GROUP, LLC.
TOLUENE RECOVERY SURGE TANK
EQUIP. #T-120
CUST. PO #64350

DRAWING NO.: 113-25-3 SHT 3 OF 3 REV. SET 2